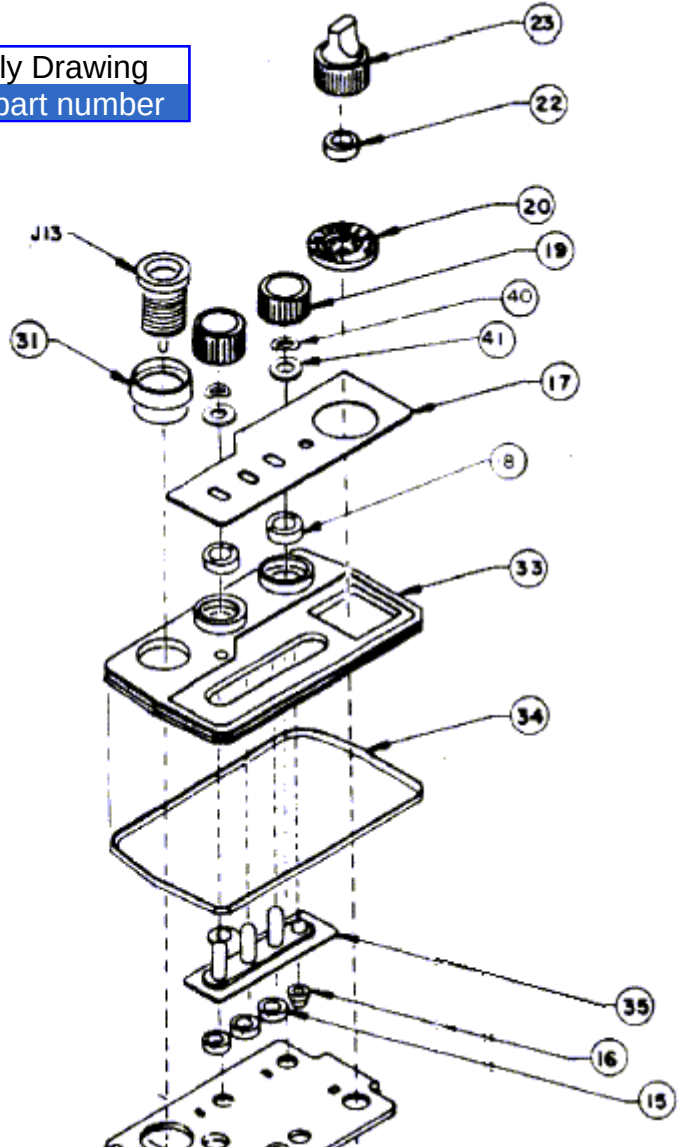Top Plate Assembly Drawing
Point to a part for part number